Towards Repeaterless Monitoring of 600 km long HVDC Cable Systems using Distributed Fiber Optic Sensing

Denis **BOLOTOV**, Ralf **ALBRECHT**, Kevin **WILMA**, Wissem **SFAR ZAOUI,** Thorben **JOSTMEIER**, Philipp **WAGENBLAST**, Wieland **HILL;** AP Sensing GmbH, (Germany), denis.bolotov@apsensing.com, ralf.albrecht@apsensing.com, kevin.wilma@apsensing.com, wissem.sfarzaoui@apsensing.com, thorben.jostmeier@apsensing.com, philipp.wagenblast@apsensing.com, wieland.hill@apsensing.com

ABSTRACT

This paper demonstrates novel approaches to extend monitoring by Distributed Fiber Optic Sensing (DFOS) on long HVDC cables. The solutions enable detection of cable faults, anchor drags, and temperature changes along the full route, with only single-ended onshore access and no powered repeaters on the route. We utilize combinations of Raman amplification and Remote Optically Pumped Amplifiers (ROPAs) to 1) demonstrate 250 km distance on a single fiber with in-line pumping, 2) explore pathways to 300 km range using a two-stage scheme with parallel pump fibers. The results confirm the feasibility of a dual-ended full route coverage up to 600 km.

KEYWORDS

Monitoring, Sensing, Distributed Fiber Optic Sensing, OTDR, Optical Amplification, Distributed Acoustic Sensing, Distributed Strain Sensing, Distributed Temperature Sensing, DFOS, DTS, DSS, DAS, ROPA, Repeater, EDFA

INTRODUCTION

Continuous monitoring of entire HVDC power cable routes is essential to ensure the reliable and efficient operation of energy transmission assets. By using integrated fiber-in-metal-tubes or externally attached fiber-optic cables, distributed fiber-optic sensing (DFOS) provides spatially resolved real-time monitoring data on temperature, strain, vibrations and acoustic events.

With DFOS technology based on Optical Time Domain Reflectometry (OTDR), laser pulses are sent from an interrogator through the optical fiber. Part of the light wave is scattered back (backscattering), as the light waves interact with the glass. The backscattered signal carries valuable information on temperature, strain or acoustic conditions, which are then measured and analyzed.

Distributed acoustic sensing (DAS) serves for cable fault localization and the detection of third-party interference, e.g. by mechanical excavation near land cables, and by fishing trawlers or anchoring for submarine cables [1]. Distributed strain sensing (DSS) enables monitoring of mechanical stress as caused by cable deformation. This helps to identify cable movement, seabed shifts, or unexpected mechanical loading. Distributed temperature sensing (DTS) provides sheath temperature measurements for calculating conductor temperatures and cable ampacities using real-time thermal rating (RTTR) or the depth of burial (DoB) of the cable [2]. It can be utilized for the detection of anomalous conditions [3].

The range of currently available DFOS solutions is limited to about 150 km due to strong attenuation of optical signals in long fibers [4]. Even with dual-ended interrogation the monitoring coverage is limited to lengths of 300 km. The lengths of submarine HVDC interconnector cables often exceed the capability of current DFOS technologies, especially when electric power for supplying optical repeaters is not available along the route.

In this paper, we present DFOS architectures capable of monitoring cable lengths of more than 500 km without the need for active repeaters or other electrically powered equipment along the route.

Optical amplification processes are used to overcome the range limit and to enhance the monitoring coverage significantly. The strategic deployment of Remote Optically Pumped Amplifiers (ROPAs) on the cable route enables regeneration of the optical signals in the fiber to overcome the accumulated signal attenuation on long ranges.

Two long-range DFOS approaches are presented in this paper.

First, we demonstrate the extension of the single-ended monitoring range to 250 km. We deploy DAS to verify the detection of simulated acoustic activity at 244 km distance, with ample room for longer detection ranges of at least 250 km. We call the utilized scheme 'In-line pumping' because it only requires a single fiber in the cable, the sensing fiber. The scheme relies on optical amplification within the sensing fiber and a single ROPA which is passively operated through the same fiber. The ROPA consists only of a short section of active optical fiber spliced into the optical path at cable joint locations. This scheme enables monitoring of over 500 km long cables when deployed from both ends.

To explore ways to further enhance the range, we evaluate a second approach that enables DFOS at up to 300 km range. It includes two ROPAs that are driven by 'parallel pumping' through additional fiber connections. The capabilities of DFOS monitoring at 300 km range are demonstrated by Distributed Temperature Gradient Sensing (DTGS) with sub-Kelvin resolution. We show that, ultimately, this approach could facilitate dual-ended DFOS interrogation across distances of up to 600 km. The challenges of this approach are identified and pathways to resolve them are discussed.

This paper is structured as follows:
First, the system design of in-line and parallel pumping are presented, and advantages and limitations are discussed.
Next, the fiber route setup to emulate and the long-range DFOS schemes are detailed and characterized.
Finally, DFOS results at over 250 km sensing distance are presented and discussed.

TWO DESIGNS OF LONG-RANGE DFOS SYSTEMS

The experimental investigation was divided into two parts: achieving the maximum measurement range using in-fiber pumping within the sensor fiber, and parallel pumping, where additional fibers were employed to deliver the required optical power over longer distances. Both schemes offer distinct advantages and disadvantages and are therefore presented and discussed separately.

The ROPA is one common ingredient for both schemes. It comprises a short piece of specialty fiber, specifically some meters of Erbium-doped fiber (EDF), and sometimes other small passive fiber optical components like filters or Wavelength-Division Multiplexers (WDMs). See the simplified schematics in Fig 1a) and b). The ROPA components must be spliced into the sensor fiber at a distance in the cable route, for example in a subsea cable joint.

A ROPA is passively operated ('pumped') by optical power ('pump light') from the onshore location of the DFOS system. It does not require electrical power along the cable route. In contrast, standard subsea repeaters comprise a locally operated EDFA (Erbium-doped Fiber Amplifier) which requires electronics and pump lasers in the joint, with electrical power supply and communication lines along the cable, see Fig. 1c). Employing ROPAs reduces the complexity of the installation significantly. Furthermore, our ROPA design inherently supports bi-directional operation.

In the next sections, we present two different schemes for increased DFOS sensing range by operating ROPAs.

In-line Pumping

In the case where signal amplification is achieved by pumping directly within the sensor fiber, no additional optical components need to be introduced into the sensor cable. The first gain source for the interrogator signal is distributed Raman amplification, which does not require any modification of the sensing fiber. It amplifies the optical power levels of the OTDR pulses emitted by the DFOS unit and the backscattered signals travelling in the sensing fiber. It utilizes energy transfer from shorter-wavelength 'pump light' to the forward and backward travelling signals (usually at 1550 nm). Pump light at 1455 nm is usually used because of the maximum Raman gain, but we prefer 1480 nm because of the possibility to pump ROPAs as well at this wavelength. Raman amplification partly compensates for the effects of attenuation losses in the fiber [5], and the DFOS measurement range is increased significantly.

The pump light remaining after Raman amplification can be used to provide additional signal gain through a ROPA at large distances [6]. Even at 125 km distance, the residual pump light is strong enough to operate an EDF for which usually some mW of optical power is required. In this configuration, the only structural difference compared to a typical sensor fiber is the addition of a ROPA comprising only a few meters of EDF, see Fig 1b. The DFOS range can be increased by more than 100 km using this scheme, as is presented below by verifying successful DAS operation at 244 km.

Delivering pump light along the sensor fiber in this 'in-line' scheme imposes limitations on the theoretical maximum achievable distance: The residual optical pump power that

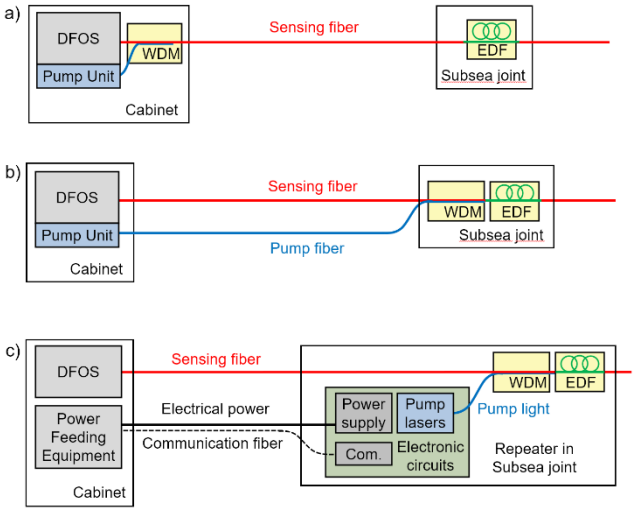

Fig. 1: Illustration of long-range DFOS schemes with a) in-line ROPA pumping, b) parallel ROPA puming and c) electrically powered subsea repeaters.

is available for pumping the EDF in the ROPA is limited by two processes: First, only pump light which is not consumed in the Raman amplification process at the beginning of the fiber is left. Since EDF amplification is inherently linked to Raman scattering in this way, simply increasing the pump power is not effective, as the pump light undergoes additional nonlinear losses, preventing any substantial gain increase in the EDF beyond a certain distance. And secondly, attenuation gradually and unavoidably reduces the optical powers during propagation through the fiber. Moreover, raising the optical pump power above a certain threshold imposes constraints on the optical power of the pulses used in the OTDR-based DFOS technology. Their power must be reduced to avoid detrimental nonlinear optical interactions in the fiber that reduce the signal quality and increase DFOS measurement noise.

Parallel Pumping

The limit on initial OTDR pulse power is absent when the optical pump power is delivered to the ROPA via a dedicated fiber, see 'Pump fiber' in Fig. 1b). In this configuration of 'parallel pumping', the pump light does not interact with the OTDR pulses or the backscatter signal; instead, its optical power is adjusted solely to provide the required gain in the EDF. As a result, the EDF can be installed at a much larger distance from the beginning of the cable, provided that a sufficiently powerful pump source is available.

The primary limitations in this scheme arise from nonlinear effects in the pump fiber, which become significant when using high-power pump lasers. The two most prominent effects are stimulated Raman scattering (SRS) and stimulated Brillouin scattering (SBS). SRS causes a redistribution of optical energy, eventually depleting the pump light and preventing sufficient power from reaching the EDF for amplification. SBS generates a strong backscattering signal propagating opposite to the pump direction, thereby reducing the forward-propagating pump power available for the EDF. Both effects have been extensively studied, and several methods exist to mitigate their impact.

Considering and properly reducing the influence of these

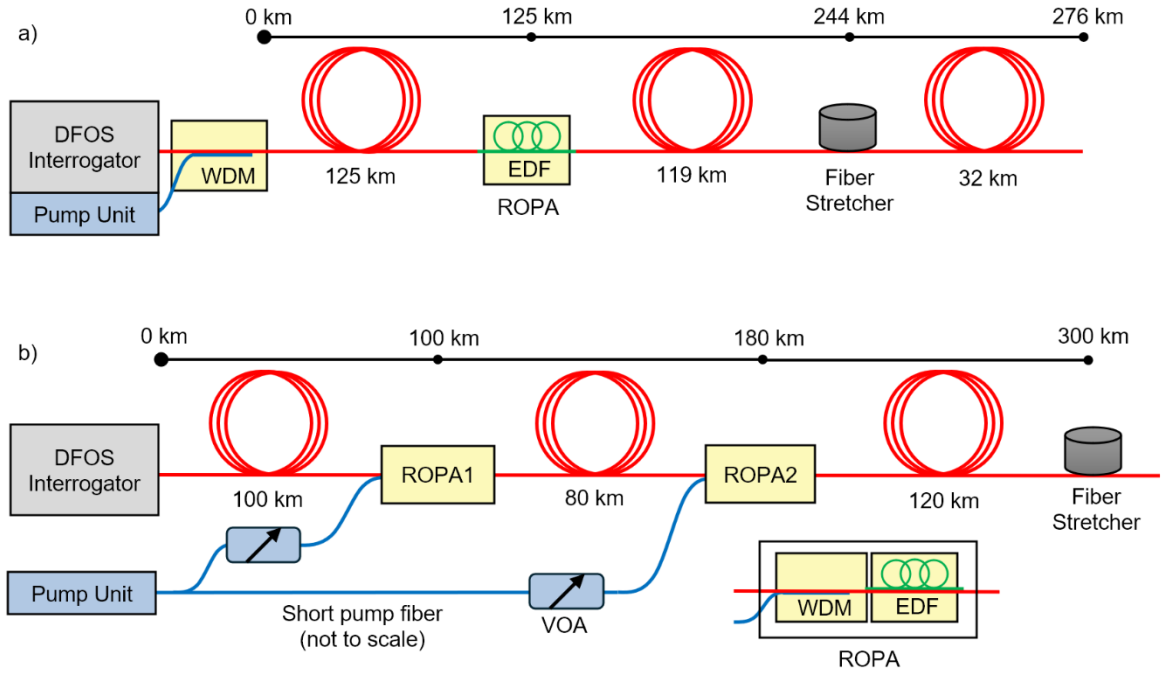

Fig. 2: Experimental long-range DFOS fiber route setups. a) In-line pumping with an EDF at 125 km that is pumped through the sensing fiber. b) Parallel pumping where pump light delivered separately to each ROPA.

limiting effects requires additional solutions in the design of such a long-range sensor system. For parallel pumping, we focus on the ability of the DFOS system to operate over long distances if sufficient amplification is provided. We operate the two ROPAs with short parallel pump fibers (< 10 km) only, not with the 100 km or 180 km fiber lengths required in the field. Addressing these limiting effects is subject of ongoing work; mitigation strategies have already been identified and implemented but are beyond the scope of this paper.

FIBER ROUTE SETUP AND ROPA GAIN CHARACTERIZATION

The laboratory setup shown in Fig. 2 emulates long-haul sensing scenarios using multiple spools of ultra-low-loss fiber, and ROPAs positioned at certain intervals. Two versions of the setup were implemented: one for in-line pumping and one for parallel pumping. Multiple spools of ultra-low loss (ULL) G.654.D fiber were used for both signal propagation and pump delivery to the EDF. The measured attenuation was 0.152 dB/km at 1550 nm and 0.168 dB/km at 1480 nm.

The schematic of the in-line pumping setup is shown in Fig. 2a. The pump light source was operated at around 1480nm. A WDM was used to combine the pump light with the signal from the DFOS interrogator directly behind its output. For the ROPA, a few meters of EDF were spliced into the sensor fiber at 125 km.

The parallel pumping setup is shown in Fig. 2b. A pump laser with a wavelength of 1480 nm served as the pump source, and its output was split into two paths: one delivering pump light to the first ROPA at 100 km and the other to the second ROPA at 180 km. Two variable optical attenuators (VOAs) were used to precisely control the pump power delivered for each EDF.

OTDR measurements were used to assess the amplification processes and the increase of the optical signal levels which enables the range enhancement of OTDR-based DFOS. The resulting OTDR traces with pump power applied are shown in Fig. 3. The relative power is plotted with respect to the noise level at the fiber end for each measurement.

We first evaluate the OTDR trace of the in-line pumping configuration (blue line): The initial rise and plateau of the optical power up to about 50 km is attributed to Raman amplification. It first saturates and then ceases completely due to pump depletion and attenuation (see the discussion of limitations above). Behind this distance, the constant negative signal slopes matches the signal attenuation during propagation through the fiber.

At 125 km distance, a sharp signal increase is generated by the ROPA proving 12 dB of signal gain. It thereby compensates for the signal attenuation accumulated up to this distance. Effectively, it acts like a bi-directional repeater and regenerates the OTDR pulse power to a

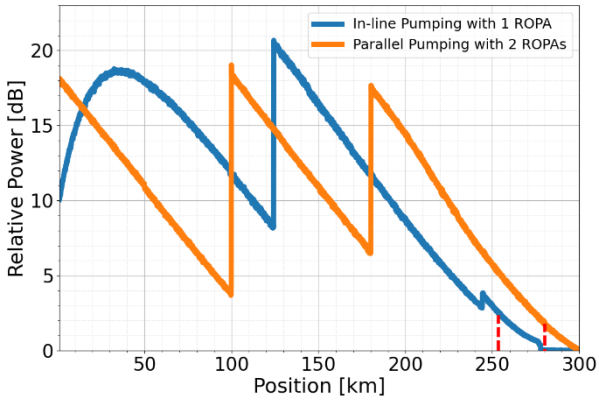

Fig. 3: OTDR plots for in-line (blue) and parallel (orange) pump configurations. Red vertical lines mark the maximum DAS monitoring range (see Fig. 5)

suitable level and amplifies the backscattered signals from the ensuing fiber route behind this point.

The small signal increase at 245 km results from the splice between the low-loss fiber and standard SMF, which has a larger numerical apertue and thus higher Rayleigh backscatter capture ratio. The OTDR signal begins to saturate as it approaches the instrument's noise floor close to the fiber end at 280 km.

In the parallel-pumping configuration (red line), the OTDR signal decreases continuously through the first 100 km due to fiber attenuation up to the first ROPA location. The signal gain was about 15 dB at 100 km and compensated the preceding attenuation.

The second ROPA at 180 km provides a gain of 11 dB and regenerates the signals again to push the measurement range to 300 km. As discussed above, providing sufficient pump power to operate a ROPA at this distance through parallel fibers requires managing detrimental nonlinear optical effects, which is part of ongoing work but not discussed in this paper.

LONG-RANGE DFOS RESULTS

To demonstrate the extended-range capability of DFOS for event detection at ultra-long distances, a fiber stretcher was installed towards the end of the fiber routes. It simulated acoustic activity or temperature changes by applying tiny elongation or compression to 60m of fiber coiled around a piezoelectric cylinder [7].

In-line pumping for over 250 km DAS

In the in-line pumping configuration, the stretcher was positioned at 244.4 km. The DFOS measurement was performed using a commercially available DAS interrogator with a localization accuracy of 50 m.

Fig. 4 shows the acoustic Frequency Band Energy (FBE) in a 'waterfall' diagram obtained by applying an amplitude-modulated signal the stretcher. The applied sine wave had a frequency of 33 Hz, with amplitude modulation at a 5 s period and a 50% duty cycle, i.e. the acoustic signal is turned ON/OFF every 2.5 seconds.

The simulated acoustic event is clearly visible against a low noise background, and its localization and temporal

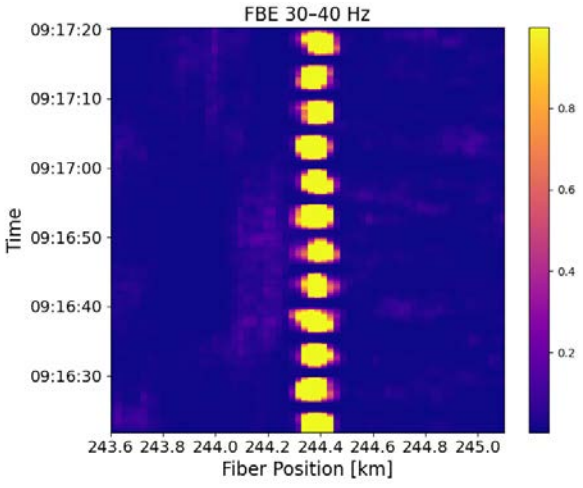

Fig. 4: DAS waterfall chart showing a simulated acoustical signal at 244.4 km distance.

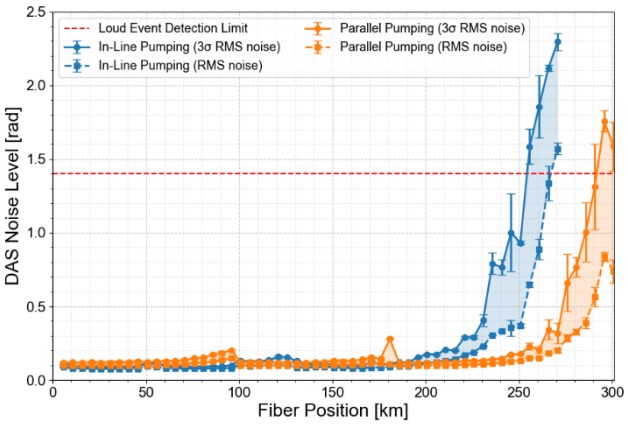

Fig. 5: DAS noise level over distance the for in-line and parallel pumping schemes.

dynamics can be precisely identified and used for detection and classification. This result proves the capability of the in-line amplification scheme and our interrogator to perform DAS measurements at this significantly enhanced distance range.

The high SNR indicates that the DAS monitoring range can be extended to at least 250 km in the given configuration, which was confirmed by the analysis of the average DAS noise level over distance. The results for both pump configurations are shown in Fig. 5. Following the definition of the maximum monitoring distance given below, we achieved approximately 255 km DAS monitoring range in-line pumping.

Parallel pumping as a pathway to 300 km

Following the same definition for the results of the parallel pumping scheme (red data in Fig. 5), at least 290 km range were achieved for DAS. Moreover, the OTDR traces and DAS noise data indicate that this DFOS scheme enables sensing at even larger distances. This extended sensing capability is of particular relevance for transmission system operators (TSOs), who are often concerned with the precise localization of specific events, such as cable faults, even when their magnitude is insufficient to trigger an alarm but remains detectable in the DAS data.

Fig. 6 shows the experimental results for the detection of

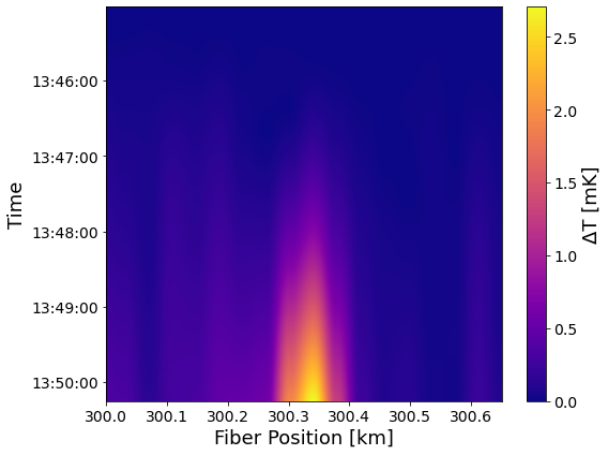

Fig. 6: Waterfall diagram showing a emulated temperature change applied at 300.3 km distance from 13:45:30 to 13:50:00.

localized temperature drift. A fiber stretcher located at 300.31 km linearly elongates a 60 m fiber section to emulate a temperature-induced change of optical path length in the fiber. The resulting temperature ramp is clearly visible and localized in the time–position–temperature 'waterfall' plot. These results confirm the DFOS system's capability to detect temperature changes in the milli-Kelvin range at a distance of 300 km using Distributed Temperature Gradient Sensing (DTGS).

CONCLUSION

This work demonstrates that novel DFOS schemes using a combination of optical amplification processes can monitor over 250 km long cables. In-line Raman amplification and ROPA operation requires only the addition of a short specialty fiber into the cable. This passive, repeaterless design is particularly suitable for subsea HVDC cables, where only shore-end access is feasible and powered inline equipment cannot easily be deployed underwater.

DAS monitoring applications like detecting and locating cable faults or anchor drags were demonstrated by clearly identifying simulated acoustic events at 244 km distance.

More advanced schemes using additional pump transport fibers can provide a means to extend this range to 300 km to potentially cover cable links up to 600 km lengths. These schemes require further investigation to mitigate constraints from using high optical powers, and additional work will be carried out to bring them closer to practical implementation. The capability of DFOS to work at up to 600 km distance was shown by detecting simulated sub-Kelvin temperature changes.

APPENDIX

Definition of DAS monitoring range

The self-noise [7] of the entire signal path was recorded to evaluate the performance using a root-mean-square (RMS) noise analysis. The RMS values were calculated from four recordings, each 30 seconds long, using the measured optical phase data in acoustic frequency band above 5 Hz. The values were then averaged and presented with standard deviations, using a 5 km spacing between the analyzed points. We found that an RMS noise level below 1.4 rad guarantees the detection of loud events such as cable faults or anchor drags. To ensure reliable event detection even at large fiber distances, the '3σ RMS noise' is a useful indicator. It is calculated from the data within a range of 1 km with the 0.3% (3σ) percentile of highest noise levels. This limit is used for defining the maximum DAS monitoring range.

REFERENCES

[1] B. Drapp and M. Mildner, 2025, "Enhancing Coastal Critical Infrastructure Protection with Distributed Acoustic Sensing (DAS)", Proc. UDT 2025 Technical Conference, Presentation/Panel (2025).

[2] W. Sfar Zaoui, J. Lux, T. Lucignano, and O. P. Hobberstad, 2023, "Depth of Burial State Monitoring of a 500 kV HVDC Offshore Power Cable Interconnector using Distributed Fiber-Optic Temperature Sensing", Proc. 11th Int. Conf. on Insulated Power Cables, D2-1 (2023).

[3] S. Thakur, G. T. Correia, J. Holbøll, and J. Niemann-Larsen, 2023, "Anomalous Condition Detection for Subsea Cables using Distributed Temperature Sensing Measurements", Proc. 11th Int. Conf. on Insulated Power Cables, E5-1 (2023).

[4] G. Cedilnik, G. Lees, P. E. Schmidt, S. Herstrom and T. Geisler, 2019, "Pushing the Reach of Fiber Distributed Acoustic Sensing to 125 km Without the Use of Amplification", IEEE Sens. Lett. 3(3), 1–4 (2019).

[5] W. Pelouch, 2015, "Raman Amplification: an Enabling Technology for High Capacity, Long-Haul Transmission," Optical Fiber Communication Conference, OSA Technical Digest (online) (Optica Publishing Group, 2015), paper W1C.1.

[6] LD Van Putten, A Masoudi, G Brambilla, 2019 "100-km-sensing-range single-ended distributed vibration sensor based on remotely pumped Erbium-doped fiber amplifier", Opt Lett. 2019 Dec 15;44(24):5925-5928.

[7] SEAFOM, 2024, "Measuring Sensor Performance Document – (SEAFOM MSP-02 V2.0): DAS Parameter Definitions and Tests", SEAFOM Technical Document, Document No. MSP-02 V2.0 (2024).

GLOSSARY

DAS: Distributed Acoustic Sensing
DFOS: Distributed Fiber-Optic Sensing
DoB: Depth of Burial
DTS: Distributed Temperature Sensing
DTGS: Distributed Temperature Gradient Sensing
DSS: Distributed Strain Sensing
EDF: Erbium-Doped Fiber
EDFA: Erbium-Doped Fiber Amplifier
FBE: Frequency Band Energy
OTDR: Optical Time-Domain Reflectometry
RMS: Root-Mean-Square
ROPA: Remote Optically Pumped Amplifier
RTTR: Real-Time Thermal Rating
SBS: Stimulated Brillouin Scattering
SRS: Stimulated Raman Scattering
SNR: Signal to Noise Ratio
TSO: Transmission System Operator
ULL: Ultra-low Loss
VOA: Variable Optical Attenuator
WDM: Wavelength-Division Multiplexer